LAHDEN AMMATTIKORKEAKOULU
Lahti University of Applied Sciences

SOLIDIWOOD PROJECT

LAHTI UNIVERSITY OF APPLIED SCINCES
Woodtechnology
Project
December 2013
Juraj Cerveny
Matio Palfrader

CONTENT

1 INTRODUCTION 2

2 SOLIDIWOOD 4

3 MANUFACTURING TEST 5

3.1 Preparations 5

3.2 Preprofiling 6

3.3 Water soaking 7

3.4 Hot pressing 7

3.5 Profiling 10

3.6 Surface treatment 12

4 LATEX BASED COATING 15

5 COOLING AND MEASUREMENTS 17

6 TESTS 18

6.1 Test types 18

6.2 Results 19

1 INTRODUCTION

The objective of this project was to make some basic tests for simple products, in this case, terrace flooring. Basic tests are made to test technology`s reliability. Reliability is due to previous projects in which has been tested the manufacturing of products which are made by using Solidiwood- technology. These previous projects had shown promising results, so this project was the next step in the research of Solidiwood`s reliability. The technology is called Solidiwood. Solidiwood is so called 3D hotforming technology to process solid wood material into different final products.

The first part of this project introduces the Solidiwood- technology, which means of using high temperature, pressing and profiles for drying, shaping (profiling) and surface treating. All of these operations are executed in one machine to reach the final result. One of the main ideas of Solidiwood is to produce different kind of wooden pieces using one machine to manufacture from fresh wood to a final product. This process was applied and experimented for manufacturing exterior flooring.

The main part describes the steps that were made in the laboratory to execute the operations needed for manufacturing of terrace flooring. These were preparations before actual hot forming and adjusting and defining of different parameters of hot forming. Experiments were done specially from the point of view of defining exact values of temperature used in the press, amount of pressure, time, humidity of the fresh planks and other circumstances, such as surface treatment. The lowest temperature, turnaround time, and pressure were considered very important due to saving of wood material and energy as much as possible. Also turnaround time in designed industrial level process would be as short as possible. The process` cost-effectiveness and the level of final product are main actors which affect to the profit.

Besides the basic factors of manufacturing process, at the end of the project were done a couple of experiments in surface treatment and different kind of weather tests. Surface treatment experiments were dealing with new coating liquid mixture, familiar in paper industry. Very often surface treatment determines in which the product is used. In this project the surface treatment is considered to outside use. Weather tests were mostly executed at the end of the project and for that reason the results were considered very limited. Only test that was done successfully was boiling test.

2 SOLIDIWOOD

Solidiwood is a 3D hotforming technology which idea is to produce fresh- or exportdried solid wood to high level of final- and semin final products. These products are tailored case by case because in every target can be applied a unique product which is optimized just for that purpose. These tailored cases can vary by moisture content, dimensions, construction, and piece of wood and surface treatment. Solidiwood technology is aimed to make more effective businesses because of major savings in production process and possibility to manufacture high level of end products with same costs as traditional chamber dried wood, (with certain limitations).

One of primary objectives of this Solidiwood research was to demonstrate hot forming method to manufacture high level of final product, which has only 6% or less, of moisture content. In addition, the other aim of this project is to come up with new surface treatment options and develop current method. The objective of overall research of the technology is hoped to lead to elimination of traditional defects and find out exact parameters of every step in the process. Purpose of this research is to demonstrate example final product of terrace plank and test its properties to give it trustable reliability.

The project was operated in cooperation with Koskisen Oy and Ilvolankoski Oy. Koskisen Oy provided the raw materials, in this case spruce timber of 50- 70% moisture content. Ilvolankoski Oy is the owner of Solidiwood- technology.

3 MANUFACTURING TEST

3.1 Preparations

Planks were cut from fresh spruce planks into dimensions of 22x90x350mm. Dimensions were chosen due to previous experiments which were shown good results. Especially the length of the plank was limited because of little press, which was available in the laboratory. There was also a bigger press, but it didn`t fit so well for the experiments. On the other hand it can be said that “what we can do in small scale can also be applied in big scale”. For that reason there was a chance to save material and make reliable experiments by using little samples and planks.

After the planks were cut into correct dimension, they were kept in a freezer to keep the humidity at the same level all the time. Samples are shown in the picture 1. Without keeping planks into freezer, they started to dry out in room air, which made them wrangle etc. This freezing operation was due to previous projects, in which planks were also kept in freezer.

PICTURE 1. Cut planks in freezer.

Fresh timber was cut into planks with band- and circle saw. Circle saw- blades made sure the surface that was needed, was almost the same as in designed industrial level. In industrial level the planks are cut into sawmill, when the whole timber is cutted into planks. In the same stage the possible preprofiling can also be executed.

3.2 Preprofiling

Profiling in Solidiwood- technology is designed to make using non chipping machining, due to a fact of saving of raw material and blades. Preprofling is planned to use only with bigger curves and groovings. For simple and smooth products preprofiling is not done. This project was focused on terrace flooring which meant little curves or no curves or grooving. During this project profiling was made by using iron bars, which were forming the sides in the hot press. Preprofiling was needed because bars were not able to be placed on the sides of the planks in the very middle point. Preprofiles also helped in shaping of bigger curves. Planks were preprofiled by using cutting saw to make little groove in the middle of the blank sides, shown in picture 3. Iron bars could be placed easily into this little groove, when they were placed into the press. This helped to keep the profile`s groove straight.

The idea of profiling using metal bars came from saving of valuable wood material. Usually curves and profiles were made with chipping machining and then valuable, highly processed material, is cut out from final product. In this technology, profiling with non- chip machining is keeping the valuable material in the product. This “pressing wood material inside” is post to bring some valuable properties to final products, such as surface hardness, dimensioning and straightening of sides.

PICTURE 2. Preprofile, made with circle saw.

3.3 Water soaking

One of the objectives considering the final product was very smooth surface. This was meant the operate by using wood`s own moisture, which was one of the benefits of using fresh wood. In couple of tests during this project and previous projects, smooth surface was able achieve without other “extra” operations. In this project the idea was to experiment as much different options as possible and make the samples for testing using good methods that were realized. For this reason water soaking option offered clearly better results for smooth surface.

In this project planks were put into cold water for about 15 minutes. Water made the surface of the planks much softer, and when the planks were put straight into the press, soft surface was pressed hard and a result was much smoother and straight surface. More experiments were made with soaking the planks, such as soaking with water and covered with paraffin oil, or covered only with paraffin oil, but best results were considered for only with water.

Later on, in future projects, this softening operation is designed to operate with coating material, in this case paraffin oil.

3.4 Hot pressing

Pressing the planks with heat from its all sides, in this case mainly the up and down sides was the main and the most important step of the process. In this project, as in previous ones, there was utilized the press, shown in picture 3. This press was adjusted and operated with couple of switchers. These switchers allowed to control pressure and temperature of up and down pressing plates.

After the soaking, planks were placed in the middle of the pressing plates. To achieve very smooth surface, planks were covered from its pressing sides with metal sheets, shown in picture 4.

During the first minutes of pressing, large amount of water was vaporized immediately, because of high pressure and temperature. Temperature of the press was set to 160 °C, considered as the best temperature, by experiences from previous projects. Pressure was experimented many times to find and come out with best solution. The most suitable pressure, not too high to break the planks, and enough high to make the planks pressed and smoothen enough, was considered as max.20 bars. Bigger pressure did not make any bigger difference in final humidity or dimensions of the planks. Pressure of 40-50 bars made the planks crack. Smaller pressure did not make the surface as smooth as that was needed. The time of the main pressing was set to 2 hours, after this time no bigger changes of humidity or dimensions were noticed. After pressing, planks were taken out of the press and were ready to be profiled.

In optimal situation, the profiles, (will be mentioned next chapter), would be done at the same time when hotpressingdrying. This was not possible because of lack of needed tools.

This research was operated by using two different machines. One of them showed in the picture 3.

PICTURE 3. Main hot press to operate Solidiwood

PICTURE 4. Planks placed between metal sheet and ready to be pressed

3.5 Profiling

One of the main ideas of Solidiwood is to form the planks in one pressing process, which includes also side profiling. Due to possibilities of the press, profiling was not able to be done in the same time with drying, so the planks were profiled afterwards. In the picture 8 is shown profiles, which were made afterwards by applying tools available. Applying tool “system” is shown into picture 7.

Due to a fact of situation when there were no needed theoretical tools available, the planks were profiled after the hotpressingdryingprocess. In this case the demonstration of fresh softened wood was done using water soaking again.

At first, one side of the planks was put into water for 10 minutes, to make the side softer and easier to be formed. After soaking, planks were put together and stabilized by two other different planks from both sides and pressed together by using manual screw pressing tools, to avoid cracking when planks were pressed. (In theoretical processing all the sides are supported by metal boards, so in this case, supports were replaced by positioning planks side by side and from outer sides supported by MDF support pieces.Combination is shown into picture 7).

Next, when planks were faced the sides up and down, whole combination was put into the press. Iron bars of 4mm (2mm radius) were placed into the preprofiled grooves and press was closed, shown into picture 5. Same temperature of 160°C was used, and pressure was reduced to 5 bars, enough to form the grooves. Time of the side profiling was about 15-20 minutes, so the sides were completely dry after soaking. Same process was repeated with the other side, soaked and pressed. Grooves were sometimes cracked, because the wrongly adjusted conditions and parameters.

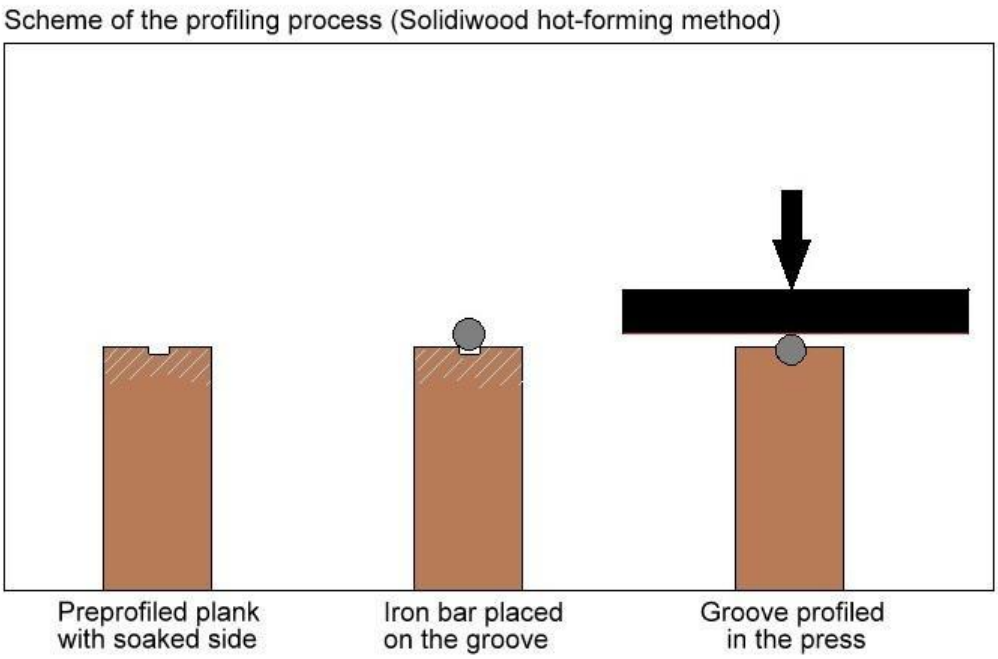

PICTURE 5. Profiling process.

PICTURE 6: Sides of planks are being soaked in water.

PICTURE 7: Profiling process in the press.

PICTURE 8: Profiles done after profiling process.

3.6 Surface treatment

After pressing and profiling when planks were dimensioned, dried and formed into final form, planks were ready to be surfaced. In this project the applied area was terrace flooring and one of very basic material, which has been applied successfully in previous projects, was parafine oil.

Surface treatment was started by covering the whole plank with parafine oil. When planks were still wet, they were put into press and pressure was increased to 30-40 bars, to make the surface very smooth, and let the oil to be pressed into the wood, shown in pictures 9 and 10. Temperature was kept in the same level of 160 degrees. Time of surface treatment pressing was about 20 minutes. Planks were put again on the metal sheets, to achieve as smooth surface as possible, shown into picture 18. Other experiment with surface was to put the oiled planks between an elastic sheet, shown into picture 11. That caused the wood`s wavy surface due to different density of the springwood and latewood, shown in picture 12.

PICTURE 9. Planks are ready after surface treatment with very smooth surface.

PICTURE 10. Boards are ready after surface treatment with very smooth surface

PICTURE 11. Surface treatment with paraffin oil by using elastic sheet.

PICTURE 12. Finished surface treatment, in which density differences were shown very clearly.

PICTURE 13. Comparison of smooth and groovy surface

4 LATEX BASED COATING

Parafine oil was designed to be main surface treatment material because of its properties considering the final target of applying the product, terrace floor. When parafine oil showed very impressive results, there was a chance to make some experiments with special kind of coating. This coating was latex-based white liquid. This coating was also better known as paper industry`s" pasta". Pasta was a combination of Acrylite latex TOP 600, Koalin, Talc and Starch. Mixture proportions are shown below.

The idea of the experiment was to test this pasta by using hot press to achieve better mechanical properties and new outlook options of the surface. Planks were covered with thin layer of pasta, and put straight into the press, between elastic sheets. Elastic sheets made the surface of the wood "wavy", because of different density of spring and late wood. Final surface was smooth, texture came out and latex was glazy, shown in picture 14. Time settled for the pressing was 10-15 minutes, pressure about 20 bars.

The decision of using elastic sheet to achieve wood`s own texture is due to plastic covering in furniture and panel industry in which wood kind of texture is made by using metallic templates. They are cheap and beautiful. With this combination of latex based coating and wood, pressed with elastic sheet, there is a chance to produce competitive options for plastic versions.

Ingredients of latex based coating are also known to make the coating better proof for different purposes. For example Kaolin is known to increase fire resistance and bring of shines. Talc is known to be hydrophobic material so it avoids water. As a combination of these materials are designed to give products a very valuable coating for many different purposes. Coating materials are shown into picture 15.

Formula of the latex-based liquid:

Talc; 1 teaspoon

Koalin; 1 teaspoon

Starch, (potato powder); 1 teaspoon

Acryline TOP 600; 2-4 tablespoons

PICTURE 14. Final outlook of white covered planks

PICTURE 15. Ingredients for the latex-based covering. From left Koalin, Talc, Starch.

5 COOLING AND MEASUREMENTS

Solidiwood- technology is designed to cover manufacturing steps between prepofiling and cutting and cooling. After surface treatment there was only left to cooling of planks and final measurements, so called analysiz. When the planks were considered as successful by their final look, structure and moisture content they were removed for different tests.

After surface treatment planks were measured by their every side and weight. Changes in dimensions, moisture content and weight were the most important information measured before and after process, shown in picture 16. Successful result was reached, when moisture content in the whole plank was less than 6%, shown in picture 17.

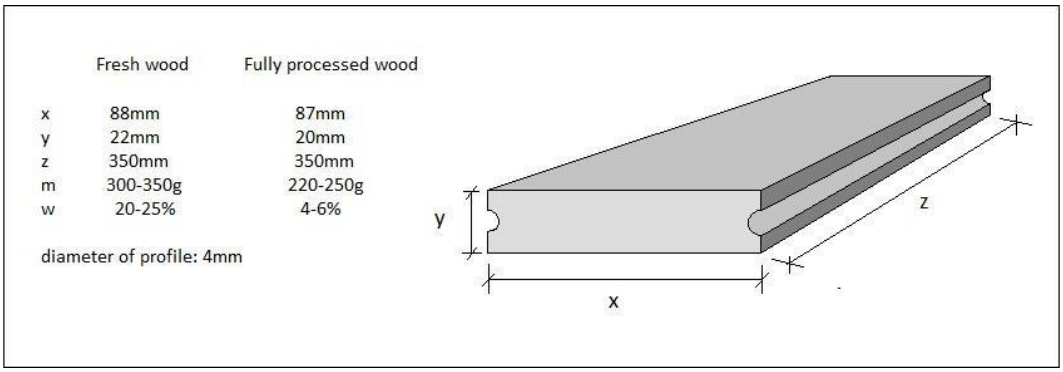

PICTURE 16. Change of dimensions and properties before and after process.

PICTURE 17. Plank after process, moisture content of 5%

6 TESTS

6.1 Test types

Besides successfull samples, which also meant successful manufacturing parameters, one of the main operations in tis project was to execute weather tests in some level. These tests were designed according to products final uses requirements. In this case terrace flooring. This meant that planks were tested outside and in extreme conditions.

First tests was boiling test in which planks were put in boiling water and see how they reacted, compared to fresh, heat- treated and chamber dried wood.

Second test was 80% humidity conditions. Solidiwood product was tested together with other samples, fresh, heat- treated and chamber dried.

Third and considered most important and the last test was made with more planks, which were put on the roof of school building, to be tested in real weather conditions. Untreated sides were covered with glue, as well as a fixinghole made for setting the planks on testing place, shown in pictures 19 and 20. Glue was put in the ends to avoid moisture absorbation.

Theoretically and what has been overall designed, ends would be handled with same liquid than other sides in the same process. In this case focus was to get nice surface for main sides so treatment of ends was aside. That’s why there was a chance to use other liquids to cover ends. One thing also affected to treatment of using different liquid to ends, and that was the realization that there was no chance press parafine oil as good to the surface as with longitudinal surfaces, which were handled with press. In theoretical design, the ends will be treated also with pressure.

6.2 Results

Results of whole of this Solidiwood- project were considered halfly successful, comparing to objectives, which were set at the beginning of this project. Overall successful results were noticed in manufacturing the final product samples, shown into picture 18, and in some short- term tests. Not so successful in getting results and considered long- term experiments, which are still under operation, are weathertests. These tests were planned to start right after the successful samples were made, but due to unsuccessfull schedule, tests were able to start at the end of the project.

PICTURE 18. Final products`surface details

There were made four tests dealing with moisture. The only test which was able to be done completely and reliably was boilingtest. The other, long- term tests were 70% and 80% relative humidity condition- tests and the last of weathertest. The weathertest was started at the end of the project and there was a huge help of construction on the roof, which was built for this kind of tests.

In boiling test, not big difference was recognized. Solidiwood reacts to the boiling water in similar way than other kinds of tested samples.

In conditions of relative humidity of 70% and 80%, after short time of testing, not big difference in dimensions change or quality of the surface was recognized. More reliable information will be given after longer time.

PICTURE 19. Ends were covered with glue.

PICTURE 20. The hole was also covered with glue.

PICTURE 21. Planks assembled on a testing construction.

PICTURE 22. Test place on the roof. Samples were settled in bottom row.